| REV. | X-Y | ECN | ITEM REVISED | ITEM BEFORE REV | AUTHORIZED BY | BY DATE |
|---|---|---|---|---|---|---|
| - | - | | - | | | |

| | |
|---|---|
| Q.A. MGR: | DATE: |
| MFG. MGR: | DATE: |
| SALES MGR: | DATE: |
| GEN. MGR: | DATE: |

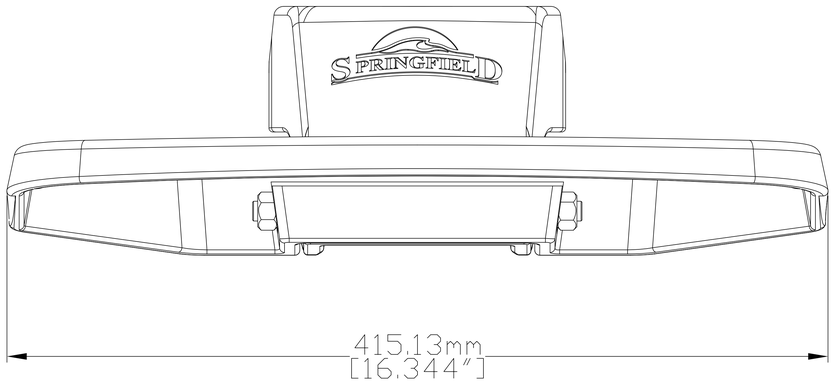


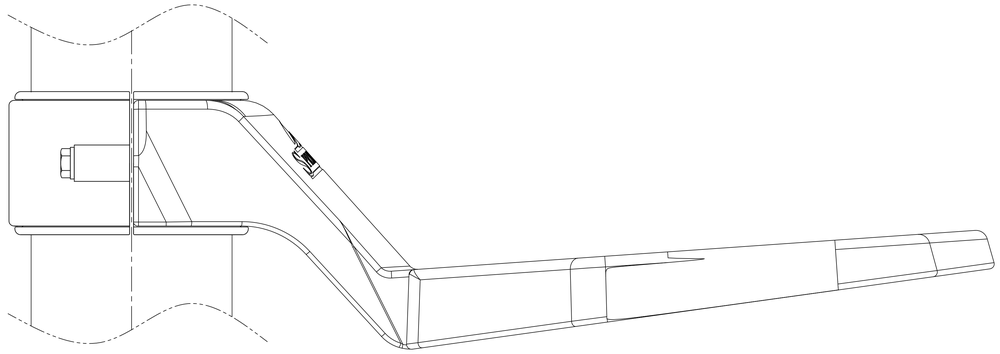

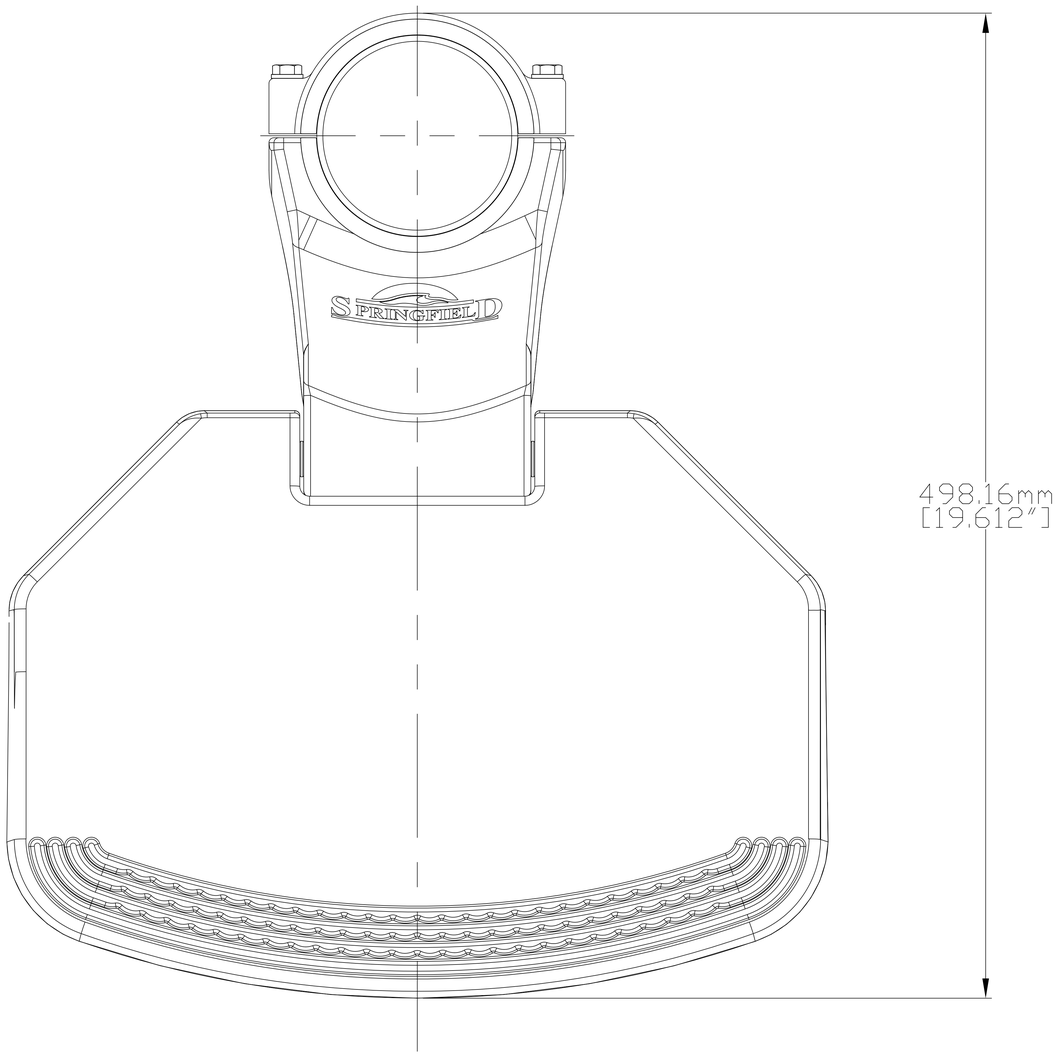


PRODUCTION RELEASE DATE: 00/00/00

SPRINGFIELD

DESIGNED BY JIANGSU CARNAHAN MECHANICAL AND ELECTRICAL TECHNOLOGY CO. LTD.

NAME : 折叠式脚踏板

| DRAWN BY | REV. BY | APPROVED BY | MATERIAL |
|---|---|---|---|
| Annie 09/29/13 | - | DATE | UNITS: INCHES [METRIC] |
| UNSPECIFIED TOLERANCES : Linear : ±0.02" [±0.5mm] ±0.010" Angular : ±0.5° | | | SCALE: FULL WEIGHT |
| CHINA DRAWING # | | USA DRAWING # | |
| MFG & PART # - | | MFG & PART # 1580045 | |